PCB LAYOUT/TOP VIEW

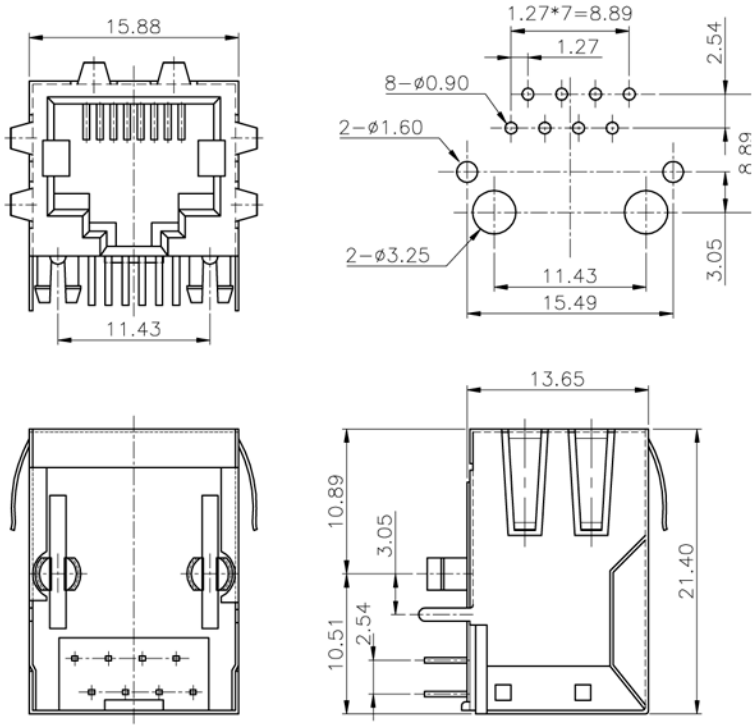

REVISION	DATE

TOLERANCE	
.XXX	±0.10
.XX	±0.25
.X	±0.38
X	±0.50

APPD.

CHKD.

DR.

Bomar Interconnect

ARTICLE: Multi-Port PCB Jack (8 Ports)

DWG NO. 301201ST

UNIT	SCALE	SHEET	REV.
mm	2/1	1/1	A